其余 3.2

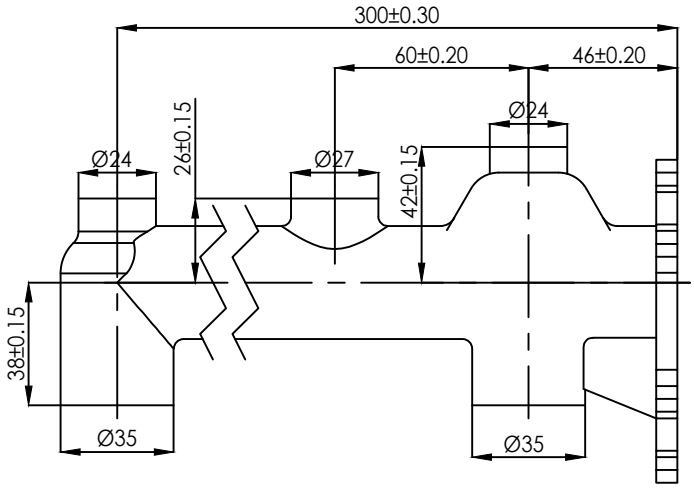

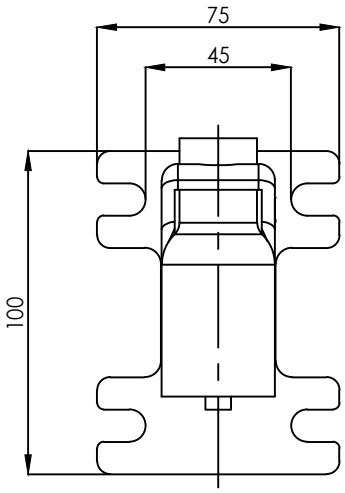

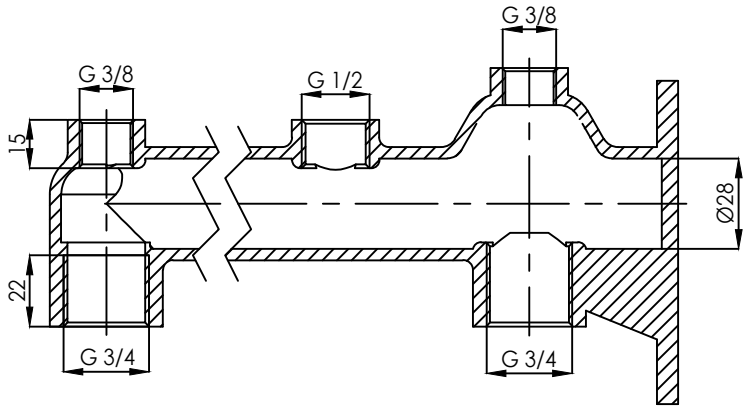

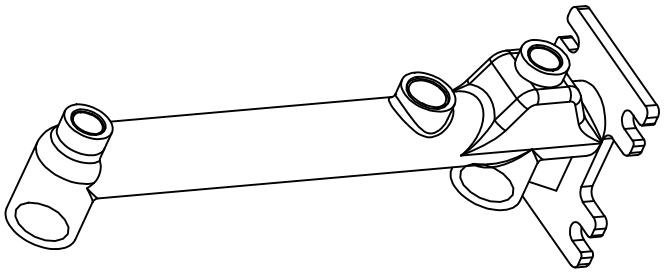

Requirement:
1. The forgings must not have protrusions, cracks, cold separation layers and any penetrating defects
2. Uninjected forged fillets are all R2
3. Uninjected chamfering
4. After the rough is sanded, the machine adds natural color treatment.
5. The trademark is embossed and protrudes 0.4-0.5mm.

Tolerances Unless Otherwise Specifial	Tolerance
< 6	±0.1
≥6－30	±0.2
≥30－120	±0.3
≥120－500	±0.5
Revision	A
Modification	0
Trial manufacture	
Proofing	
Product	√
Issue number	

Mark	Revision Description	Autograph	E.C.N	Date

Design	Yi.liu	2020.10.22	Size	A4
Checked	Shuang.wang		Scale	1:1
Approval	Shuang.wang		Tolerance grade	IT14
File			Units	mm

Title:

Simple bracket of 1PRB101

Projection

Material	CW617N
Weight	1520g

IDC Fluid Control Co.,LTD

Beijing

NO.: NEX-1PRB101-B

Client NO.: